To Promote the Progress of Science and Useful Arts

The Director

of the United States Patent and Trademark Office has received an application for a patent for a new and useful invention. The title and description of the invention are enclosed. The requirements of law have been complied with, and it has been determined that a patent on the invention shall be granted under the law.

Therefore, this United States

Patent

grants to the person(s) having title to this patent the right to exclude others from making, using, offering for sale, or selling the invention throughout the United States of America or importing the invention into the United States of America, and if the invention is a process, of the right to exclude others from using, offering for sale or selling throughout the United States of America, products made by that process, for the term set forth in 35 U.S.C. 154(a)(2) or (c)(1), subject to the payment of maintenance fees as provided by 35 U.S.C. 41(b). See the Maintenance Fee Notice on the inside of the cover.

Katherine Kelly Vidal

Director of the United States Patent and Trademark Office

Maintenance Fee Notice

If the application for this patent was filed on or after December 12, 1980, maintenance fees are due three years and six months, seven years and six months, and eleven years and six months after the date of this grant, or within a grace period of six months thereafter upon payment of a surcharge as provided by law. The amount, number and timing of the maintenance fees required may be changed by law or regulation. Unless payment of the applicable maintenance fee is received in the United States Patent and Trademark Office on or before the date the fee is due or within a grace period of six months thereafter, the patent will expire as of the end of such grace period.

Patent Term Notice

If the application for this patent was filed on or after June 8, 1995, the term of this patent begins on the date on which this patent issues and ends twenty years from the filing date of the application or, if the application contains a specific reference to an earlier filed application or applications under 35 U.S.C. 120, 121, 365(c), or 386(c), twenty years from the filing date of the earliest such application ("the twenty-year term"), subject to the payment of maintenance fees as provided by 35 U.S.C. 41(b), and any extension as provided by 35 U.S.C. 154(b) or 156 or any disclaimer under 35 U.S.C. 253.

If this application was filed prior to June 8, 1995, the term of this patent begins on the date on which this patent issues and ends on the later of seventeen years from the date of the grant of this patent or the twenty-year term set forth above for patents resulting from applications filed on or after June 8, 1995, subject to the payment of maintenance fees as provided by 35 U.S.C. 41(b) and any extension as provided by 35 U.S.C. 156 or any disclaimer under 35 U.S.C. 253.

US011823501B2

(12) **United States Patent**
Underhill et al.

(10) **Patent No.: US 11,823,501 B2**
(45) **Date of Patent: Nov. 21, 2023**

(54) **ASSOCIATING VOTING SESSIONS WITH TABULATION MACHINES IN ELECTRONIC VOTING**

(71) Applicant: **Oracle International Corporation**, Redwood City, CA (US)

(72) Inventors: **Thomas Underhill**, Murrieta, CA (US); **Adam Erickson**, Pflugerville, TX (US)

(73) Assignee: **Oracle International Corporation**, Redwood City, CA (US)

(*) Notice: Subject to any disclaimer, the term of this patent is extended or adjusted under 35 U.S.C. 154(b) by 216 days.

(21) Appl. No.: **15/681,084**

(22) Filed: **Aug. 18, 2017**

(65) **Prior Publication Data**

US 2019/0057567 A1 Feb. 21, 2019

(51) **Int. Cl.**

G07C 13/00	(2006.01)
H04L 9/40	(2022.01)
H04L 9/30	(2006.01)
H04L 9/32	(2006.01)
H04L 9/14	(2006.01)
H04L 9/08	(2006.01)

(52) **U.S. Cl.**

CPC ***G07C 13/00*** (2013.01); ***H04L 9/0825*** (2013.01); ***H04L 9/14*** (2013.01); ***H04L 9/30*** (2013.01); ***H04L 9/3226*** (2013.01); ***H04L 63/0442*** (2013.01); *G06Q 2220/00* (2013.01); *H04L 2209/463* (2013.01)

(58) **Field of Classification Search**

CPC G07C 13/00; H04L 9/0825; H04L 9/14; H04L 9/30; H04L 9/3226; H04L 63/0442

See application file for complete search history.

(56) **References Cited**

U.S. PATENT DOCUMENTS

7,565,540	B2	7/2009	Bogasky et al.	
2002/0032775	A1 *	3/2002	Venkataramaiah	H04L 29/12009 709/225
2002/0077887	A1 *	6/2002	London Shrader	G07C 13/00 705/12
2006/0013402	A1 *	1/2006	Sutton	H04L 9/0844 380/282
2006/0041514	A1 *	2/2006	Bogasky	G07C 13/00 705/64

(Continued)

OTHER PUBLICATIONS

"Public Key Cryptography, Jul. 10, 2017, Wikipedia.org" (Year: 2017).*

(Continued)

Primary Examiner — Nilesh B Khatri

(57) **ABSTRACT**

An electronic voting machine obtains session information in an encrypted state for conducting a voting session. The voting machine decrypts the session information using a decryption key that is specific to the voting machine. A ballot provided in the session information may then be presented in a user interface through which votes are received. The session information also includes an encryption key for a specific tabulation machine associated a priori with the voting session, as well as one or more datastores. The voting machine encrypts the votes with the encryption key and sends the votes in an encrypted state to the one or more datastores. The tabulation machine may then retrieve the votes from the location(s) and decrypt them using a corresponding private key.

17 Claims, 9 Drawing Sheets

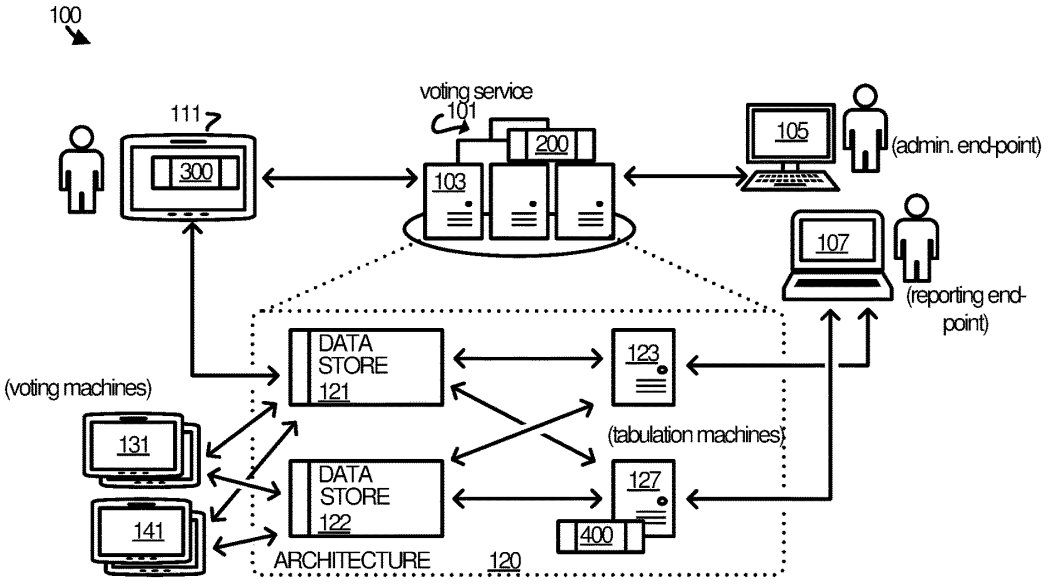

(56) **References Cited**

U.S. PATENT DOCUMENTS

2009/0179071	A1 *	7/2009	Backert	G06F 21/606 235/51
2010/0017274	A1 *	1/2010	Liesenfelt	G07C 13/00 705/12
2012/0053997	A1 *	3/2012	Garfinkle	H04L 63/08 235/386
2013/0073868	A1 *	3/2013	Forlenza	H04L 9/00 713/189
2013/0144686	A1	6/2013	Hotto et al.	
2014/0207536	A1 *	7/2014	Scott	G07C 13/00 705/12
2014/0263639	A1 *	9/2014	Bolton	G07C 13/00 235/386
2015/0221153	A1 *	8/2015	Dashiff	G07C 13/00 705/12
2015/0356804	A1 *	12/2015	Mitchel	G07C 13/00 705/12
2016/0027229	A1	1/2016	Spanos et al.	
2016/0086408	A1 *	3/2016	Myr	H04L 9/3226 705/12
2017/0063525	A1 *	3/2017	Bacon	H04L 9/008
2017/0124556	A1 *	5/2017	Seger, II	H04L 69/40
2018/0205707	A1 *	7/2018	Bellala	H04L 63/0421
2019/0019366	A1 *	1/2019	Chepel	H04L 9/3255

OTHER PUBLICATIONS

"RFC 791 Internet Protocol, Sep. 1981, Information Sciences Institute" (Year: 1981).*

B R Purushothama et al., Design and Implementation of Secure Internet Based Voting System with User Anonymity Using Identity Based Encryption System, Sep. 1, 2009, IEEE, pp. 474-481 (Year: 2009).*

Ali Azougaghe et al., An Electronic Voting System Based on Homomorphic Encryption and Prime Numbers, Dec. 14, 2015, pp. 140-145 (Year: 2015).*

Christian Meter, "Design of Distributed Voting System", Heinrich-Heine-Universitat Dusseldorf; arXiv:1702.02566v1 [cs.CR] Feb. 8, 2017; retrieved from https://arxiv.org/pdf/1702.02566.pdf, Sep. 24, 2015, pp. 1-125.

Enhanced Data Center Security with Oracle Sparc and Oracle Solaris, Whitepaper, Mar. 8, 2016, Coalfire.com.

* cited by examiner

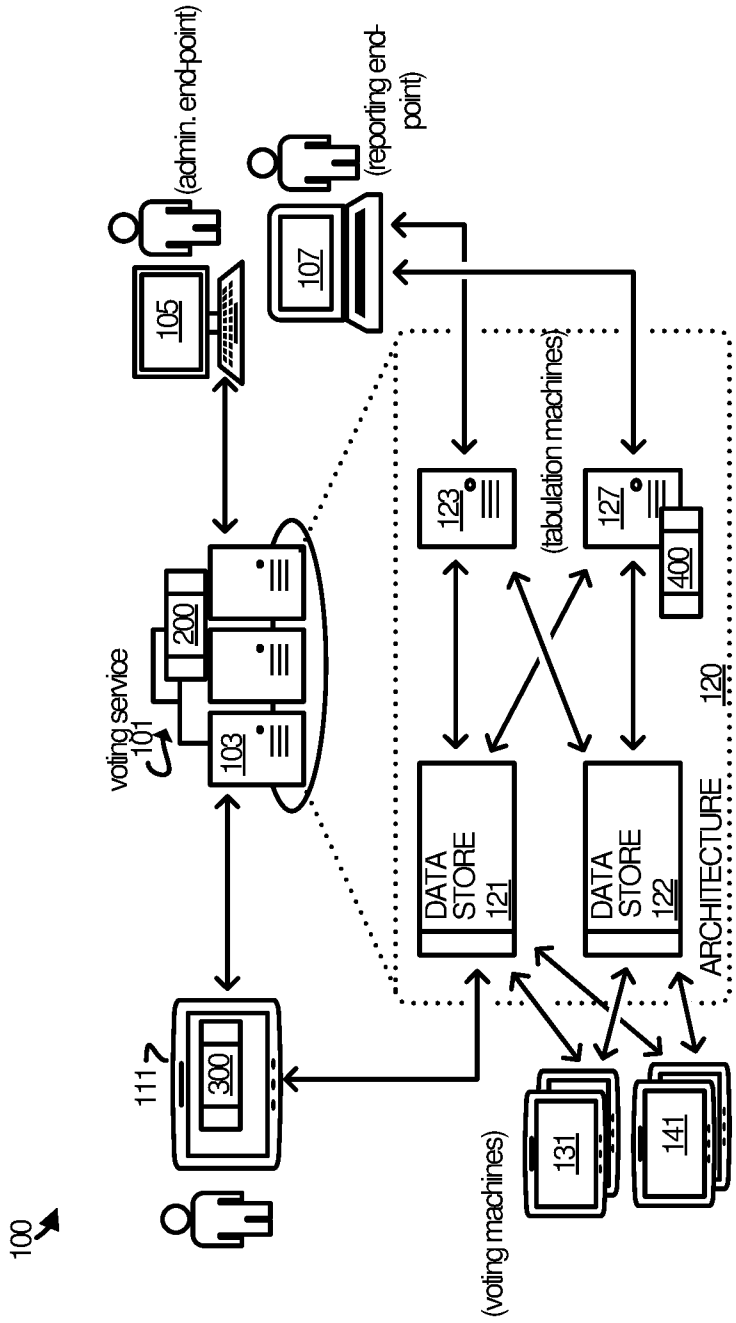
100
111
300
(voting machines)
131
141
DATA STORE 121
DATA STORE 122
ARCHITECTURE
120
(tabulation machines)
123
127
400
voting service
101
103
200
105
(admin. end-point)
107
(reporting end-point)

FIGURE 1

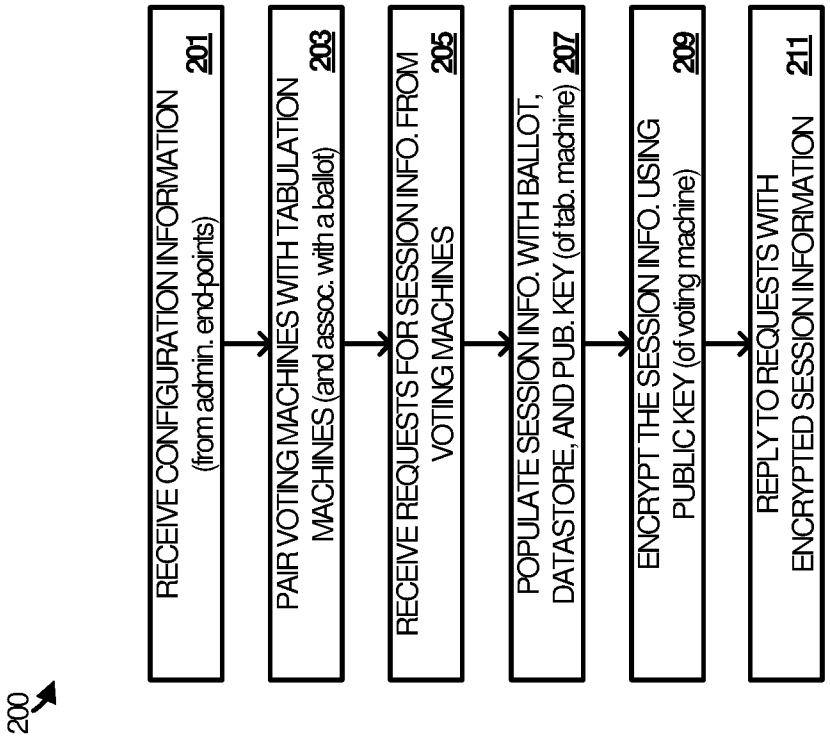
200
RECEIVE CONFIGURATION INFORMATION (from admin. end-points) 201
PAIR VOTING MACHINES WITH TABULATION MACHINES (and assoc. with a ballot) 203
RECEIVE REQUESTS FOR SESSION INFO. FROM VOTING MACHINES 205
POPULATE SESSION INFO. WITH BALLOT, DATASTORE, AND PUB. KEY (of tab. machine) 207
ENCRYPT THE SESSION INFO. USING PUBLIC KEY (of voting machine) 209
REPLY TO REQUESTS WITH ENCRYPTED SESSION INFORMATION 211

FIGURE 2

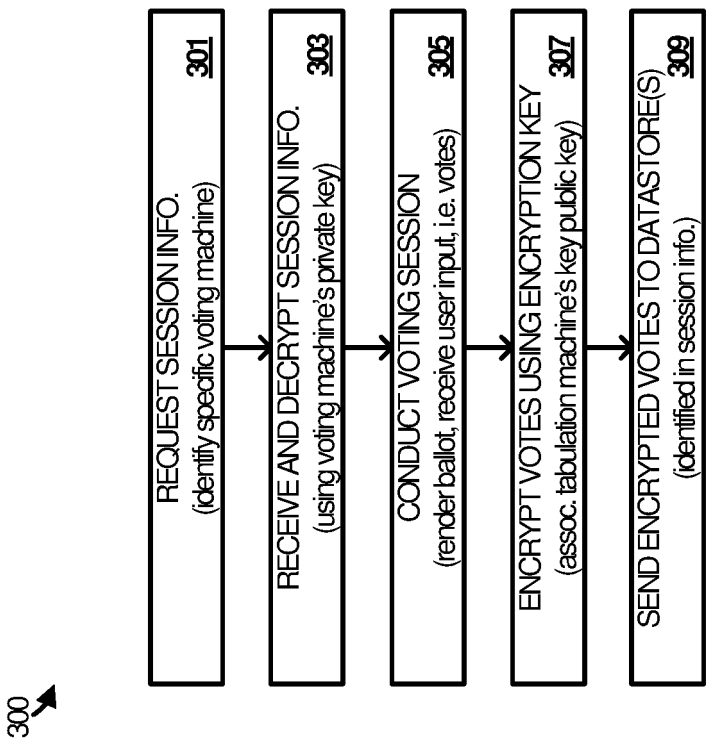
300
REQUEST SESSION INFO. (identify specific voting machine) 301
RECEIVE AND DECRYPT SESSION INFO. (using voting machine's private key) 303
CONDUCT VOTING SESSION (render ballot, receive user input, i.e. votes) 305
ENCRYPT VOTES USING ENCRYPTION KEY (assoc. tabulation machine's key public key) 307
SEND ENCRYPTED VOTES TO DATASTORE(S) (identified in session info.) 309

FIGURE 3

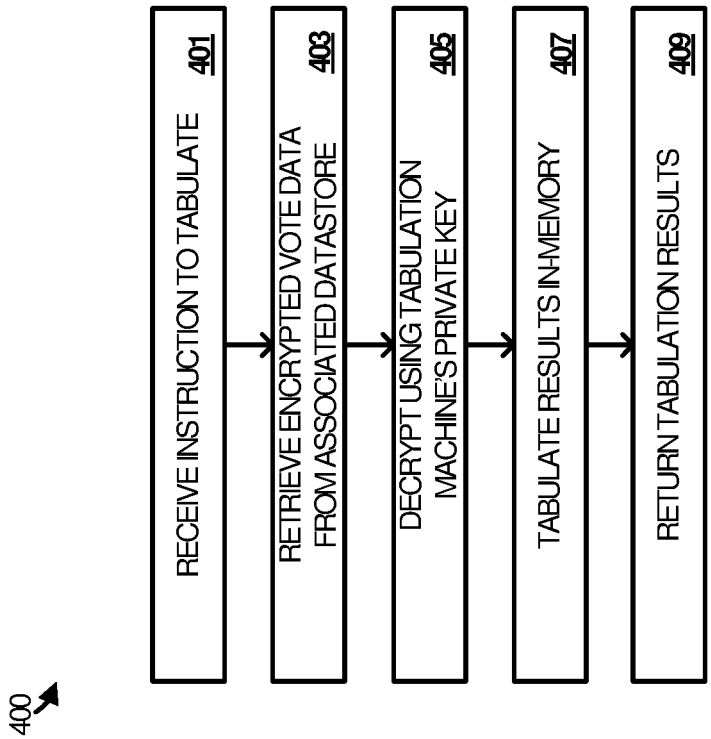
400
RECEIVE INSTRUCTION TO TABULATE 401
RETRIEVE ENCRYPTED VOTE DATA FROM ASSOCIATED DATASTORE 403
DECRYPT USING TABULATION MACHINE'S PRIVATE KEY 405
TABULATE RESULTS IN-MEMORY 407
RETURN TABULATION RESULTS 409

FIGURE 4

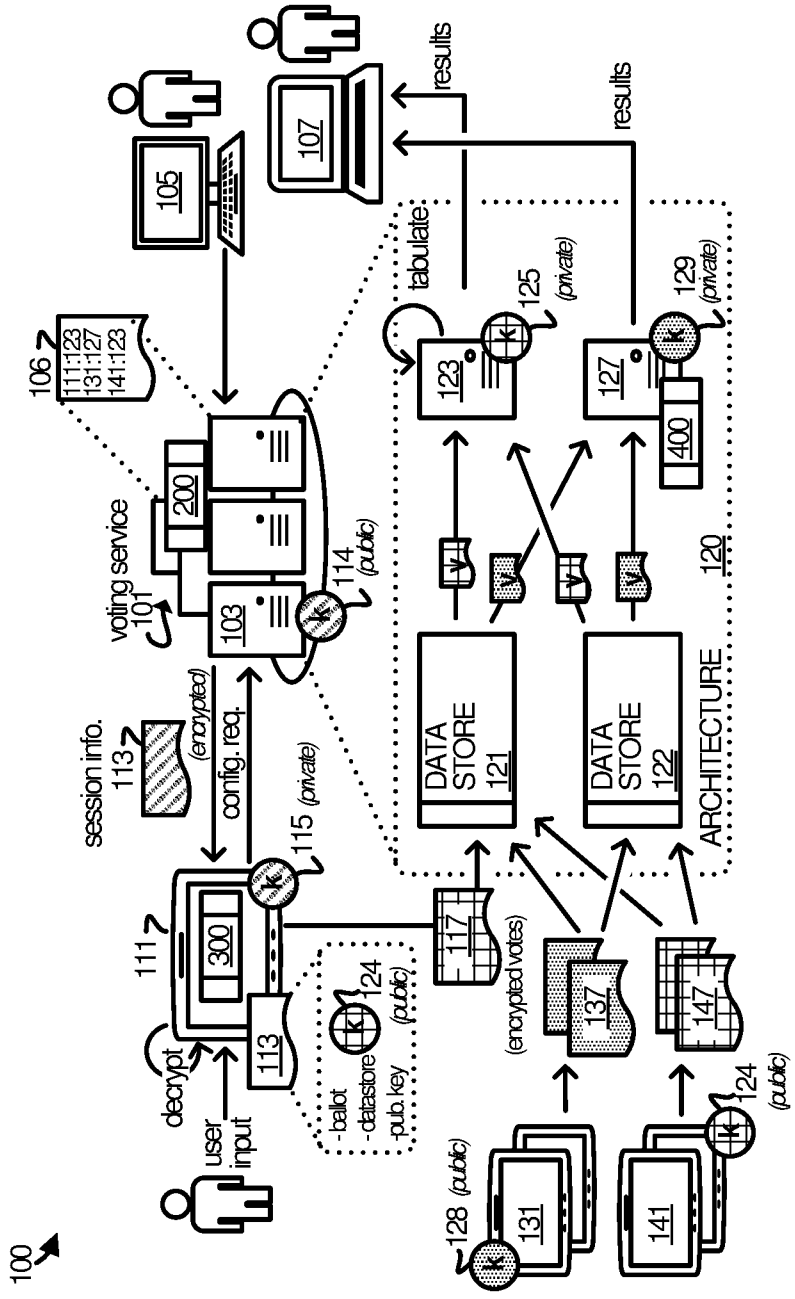
100
user input
decrypt
111
300
113
115 (private)
session info.
113
(encrypted)
config. req.
voting service
101
103
200
114 (public)
106
111:123
131:127
141:123
105
107
results
results
tabulate
123
125 (private)
127
129 (private)
400
120
DATA STORE 121
DATA STORE 122
ARCHITECTURE
117
(encrypted votes)
137
147
124 (public)
- ballot
- datastore
- pub. key
124 (public)
128 (public)
131
141

FIGURE 5

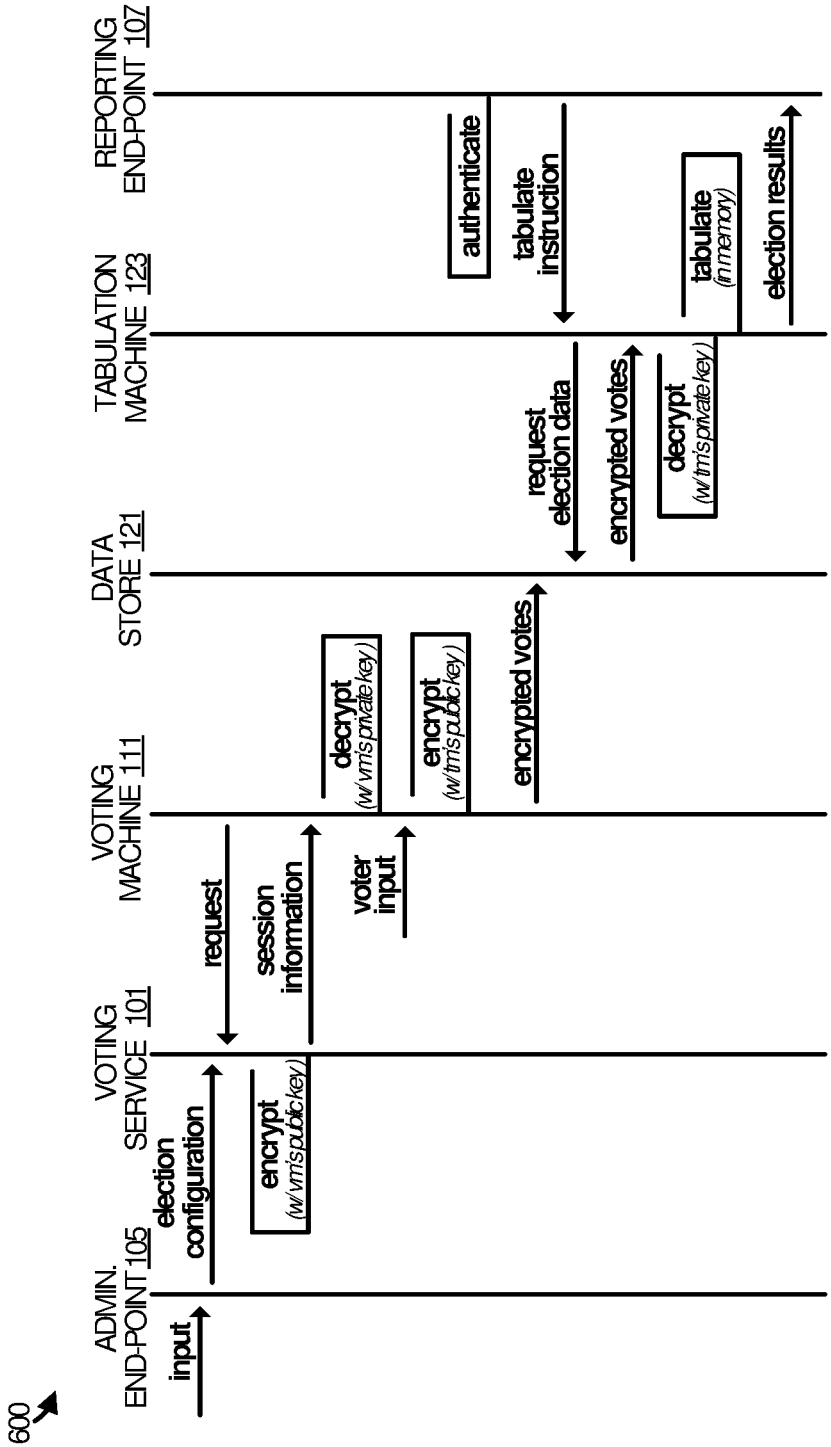
600
ADMIN. END-POINT 105
VOTING SERVICE 101
VOTING MACHINE 111
DATA STORE 121
TABULATION MACHINE 123
REPORTING END-POINT 107
input
election configuration
encrypt (w/vmispublickey)
request
session information
voter input
decrypt (w/vmisprivatekey)
encrypt (w/tmispublickey)
encrypted votes
request election data
encrypted votes
decrypt (w/tmisprivatekey)
authenticate
tabulate instruction
tabulate (in memory)
election results

FIGURE 6

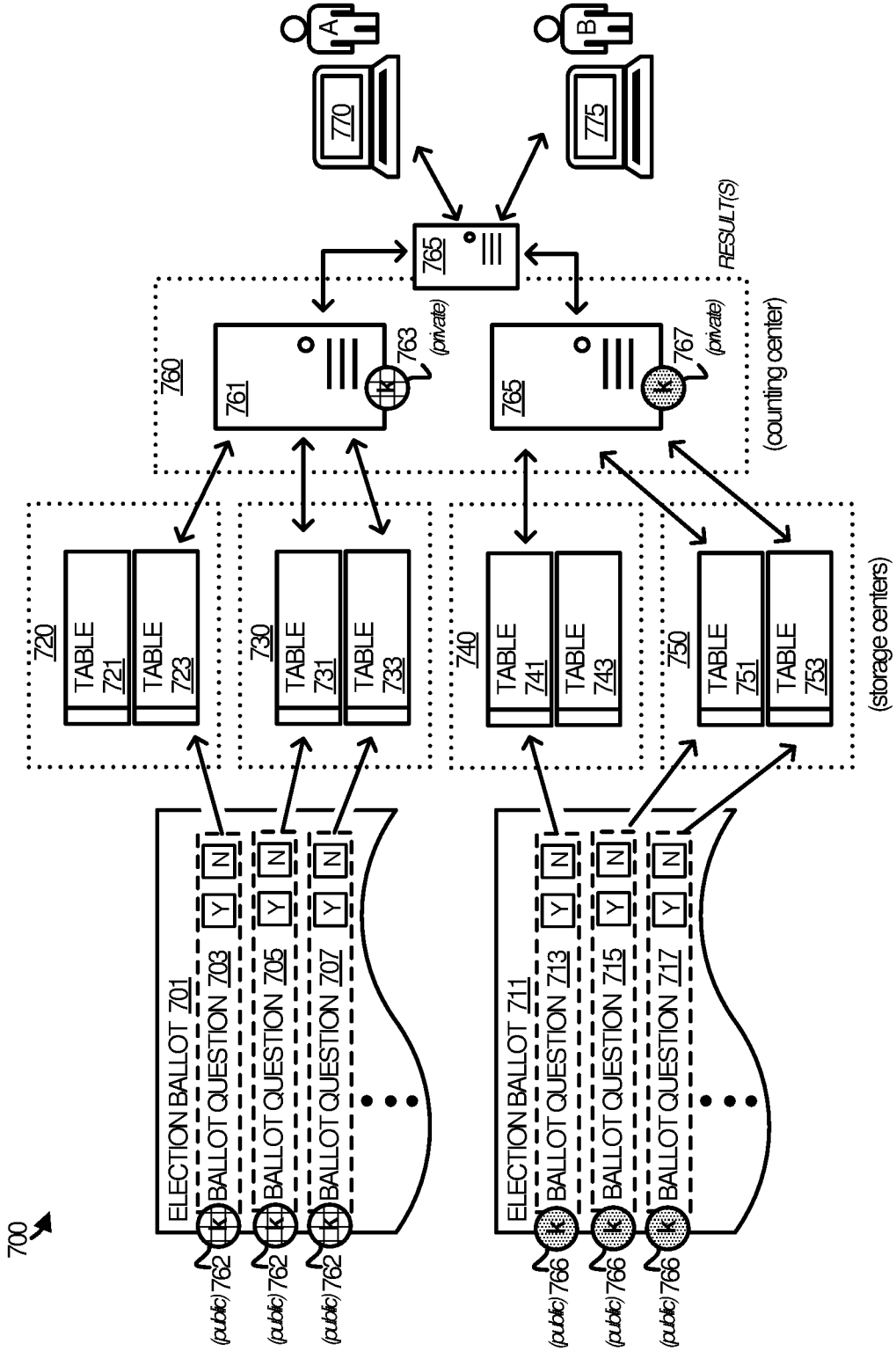
700
ELECTION BALLOT 701
BALLOT QUESTION 703
BALLOT QUESTION 705
BALLOT QUESTION 707
ELECTION BALLOT 711
BALLOT QUESTION 713
BALLOT QUESTION 715
BALLOT QUESTION 717
Y
N
(public) 762
(public) 766
720
TABLE 721
TABLE 723
730
TABLE 731
TABLE 733
740
TABLE 741
TABLE 743
750
TABLE 751
TABLE 753
(storage centers)
760
761
763
(private)
765
767
(private)
(counting center)
765
RESULT(S)
770
A
775
B

FIGURE 7

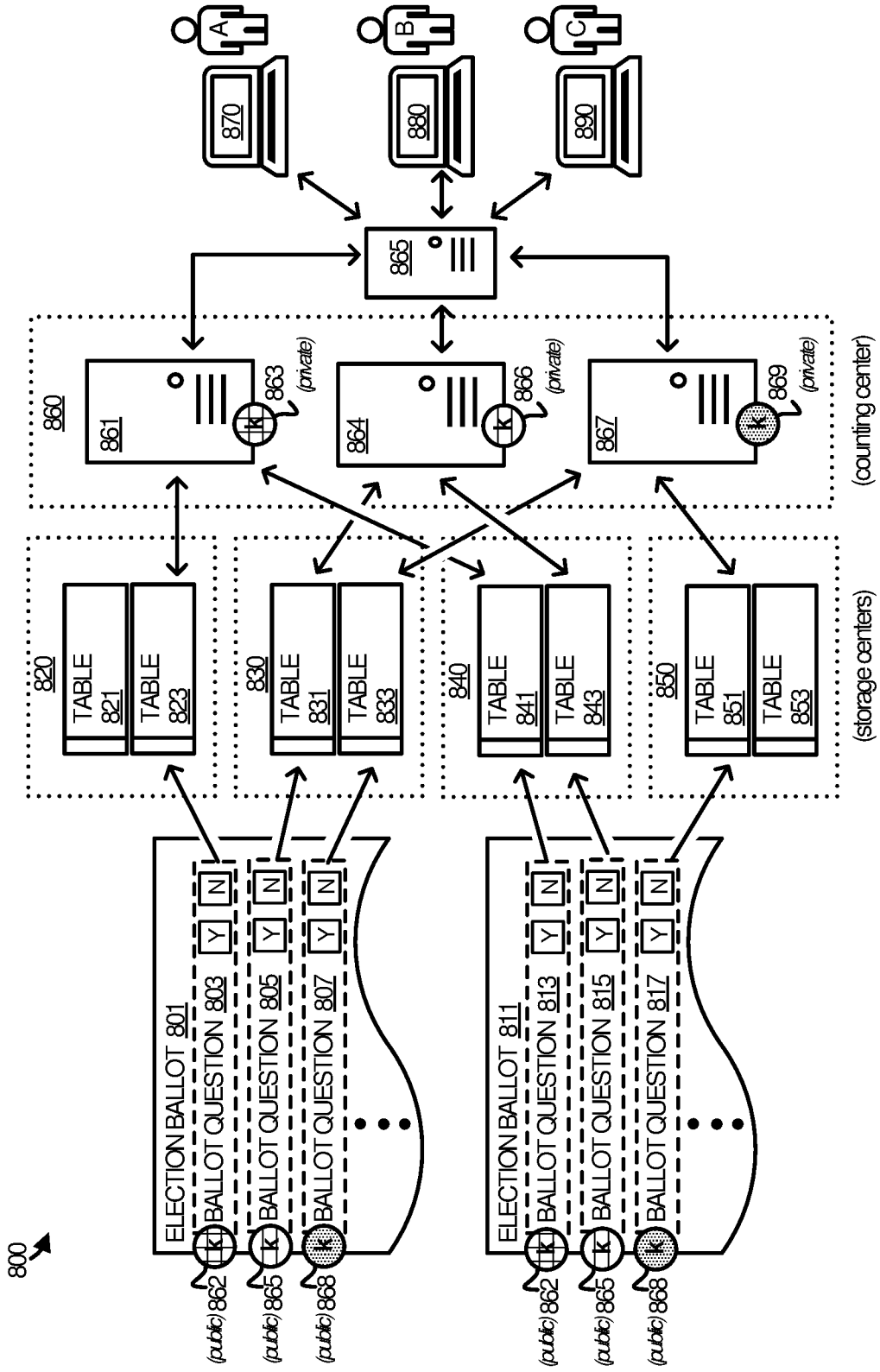
800
ELECTION BALLOT 801
BALLOT QUESTION 803
BALLOT QUESTION 805
BALLOT QUESTION 807
ELECTION BALLOT 811
BALLOT QUESTION 813
BALLOT QUESTION 815
BALLOT QUESTION 817
Y
N
k
(public) 862
(public) 865
(public) 868
820
TABLE 821
TABLE 823
830
TABLE 831
TABLE 833
840
TABLE 841
TABLE 843
850
TABLE 851
TABLE 853
(storage centers)
860
861
863
(private)
864
866
(private)
867
869
(private)
(counting center)
865
870
880
890
A
B
C

FIGURE 8

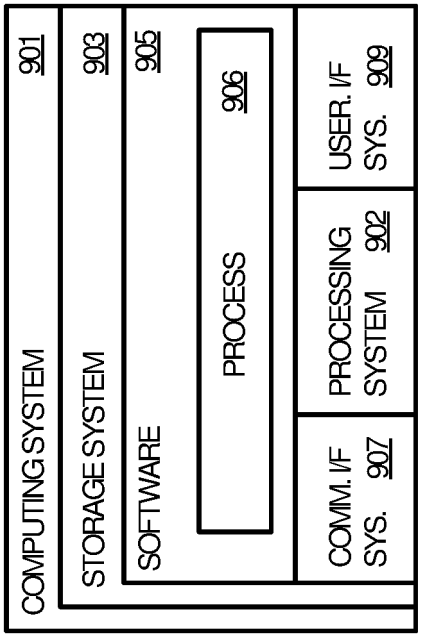
COMPUTING SYSTEM 901
STORAGE SYSTEM 903
SOFTWARE 905
PROCESS 906
COMM. I/F SYS. 907
PROCESSING SYSTEM 902
USER. I/F SYS. 909

FIGURE 9

ASSOCIATING VOTING SESSIONS WITH TABULATION MACHINES IN ELECTRONIC VOTING

TECHNICAL BACKGROUND

Electronic voting as become commonplace, but still suffers from persistent concerns about its security and efficacy. For instance, the fear that a given vote may be hacked or otherwise rendered unreliable has consistently held back the widespread adoption of electronic voting, while the apparent expense and complexity of some electronic voting systems dissuades some potential users.

A variety of solutions have been tried with respect to securing and simplifying electronic voting. A basic implementation uses stand-alone electronic voting machines connected to a network. Voters cast their votes through the voting machines and the voting machines communicate the votes to a tabulation system. The voting may take place in a supervised setting, such as a polling station, or it may be "remote," such as when the vote is cast on an individual's own mobile phone, tablet, computer, or other such device.

In either case, encryption can be used to secure both the votes and the communication channel over which they travel. One level of encryption routinely protects communications sent and received between clients and servers, while another level of encryption protects the voting data itself. The votes can be decrypted and counted to ascertain the results of the elections, ballot measures, and other questions that may have been presented to the voters on their ballots.

SUMMARY

Technology is disclosed herein that improves electronic voting. In various implementations, an electronic voting machine (hereinafter referred to as a voting machine), obtains session information in an encrypted state for conducting a voting session. The voting machine decrypts the session information using a decryption key that is specific to the voting machine. A ballot provided in the session information may then be presented in a user interface through which votes are received.

The session information also includes an encryption key for a specific tabulation machine associated a priori with the voting session, as well as one or more datastores. The voting machine encrypts the votes using the encryption key and sends the votes in an encrypted state to the one or more datastores. The tabulation machine may then retrieve the votes from the location(s) and decrypt them using its own key.

In some implementations, for the tabulation machine to be associated with a voting session, specific voting machines are paired with a given tabulation machine. Those voting machines are then deployed to facilitate the voting session. Votes originating from the specified voting machines may only be decrypted successfully by the associated tabulation machine. This may be accomplished by, for example, encrypting the votes using a public key known for the tabulation machine such that only the tabulation machine's private key can decrypt the votes successfully. In some cases, the tabulation machine may decrypt and tabulate the votes in-memory such that the votes never reside outside of the tabulation machine's memory in a decrypted state.

In still other implementations, for the tabulation machine to be associated with a voting session, specific ballot questions on a ballot may be paired with a given tabulation machine, while other ballot questions on the ballot may be paired with a different tabulation machine. Votes casts for the ballot questions may be encrypted with the public key of the first tabulation machine, while the other ballot questions may be encrypted with the public key of the other tabulation machine. The respective tabulation machines may then decrypt and count the votes using their respective private keys, possible entirely in-memory.

BRIEF DESCRIPTION OF THE DRAWINGS

Many aspects of the disclosure can be better understood with reference to the following drawings. While several implementations are described in connection with these drawings, the disclosure is not limited to the implementations disclosed herein. On the contrary, the intent is to cover all alternatives, modifications, and equivalents.

FIG. **1** illustrates an operational architecture for implementing embodiments of enhanced electronic voting.

FIG. **2** illustrates a provisioning process employed by a voting service in embodiments of enhanced electronic voting.

FIG. **3** illustrates a deployment process employed by an electronic voting machine in embodiments of enhanced electronic voting.

FIG. **4** illustrates a tabulation process employed by a tabulation machine in embodiments of enhanced electronic voting.

FIG. **5** illustrates an operational scenario in an embodiment of enhanced electronic voting.

FIG. **6** illustrates an operational sequence in an embodiment of enhanced electronic voting.

FIG. **7** illustrates an operational architecture and associated scenario in an embodiment of enhanced electronic voting.

FIG. **8** illustrates an operational architecture and associated scenario in an embodiment of enhanced electronic voting.

FIG. **9** illustrates a computing system suitable for implementing the voting technology disclosed herein, including any of the architectures, processes, operational scenarios, and operational sequences illustrated in the Figures and discussed below in the Technical Disclosure.

TECHNICAL DISCLOSURE

Technology is disclosed herein that enhances electronic voting by associating tabulation machines with voting sessions in advance of a given vote, so that the resulting voting data can be secured during the voting process and the tabulation process.

In a brief example, specific voting machines are identified ahead of a vote. These may be, for instance, a set of voting machines associated with an election commission, a jurisdiction, an enterprise, or any other type of organization that may be carrying out a vote. The vote may pertain to an election, a poll, or any other type of vote. Indeed, the vote may be carried out entirely electronically or only partly electronically.

The voting machines are then associated with one or more tabulation machines that will be used to count the votes that are cast. Examples of a suitable tabulation machine include, but are not limited to, the SPARC M7-8 server from Oracle®. The tabulation machine(s) may be hosted in a public cloud environment, a private cloud environment, on-premises, via remotely deployable infrastructure, or in some other manner. Examples of voting machines include

customized electronic voting machines, personal computing or communication devices, or any other suitable device.

In scenarios where remotely deployable infrastructure is employed, one or more tabulation machines associated with a voting session could be transported to a polling station or other such location. The tabulation machine could thus be made present in the particular jurisdiction where a vote is taking place, allowing election personnel to oversee the physical security of the tabulation machines. The tabulation machines and other attendant infrastructure resources could be arranged in a shipping container, for example, capable of being transported to the location of an election for which they have been tasked with tabulating the results of the election.

A given voting machine (or other aspects of a voting session) may become associated with a tabulation machine during the setup and configuration process for an election, poll, or the like. End-users tasked with setting up a vote may engage with a voting service hosted in the cloud. The voting service may accept various types of configuration information pertaining to the voting session, such as a ballot, ballot questions, and possibly the identity of the voting machines to be deployed. In other scenario, the voting service itself may maintain a catalog or roster of available voting machines that can be deployed.

With the configuration information known, the voting service may then select or otherwise determine which one or more tabulation machines to deploy in support of the election or poll. Session information may be produced by the voting service on a per-voting machine basis with which to configure the voting machines at the time of their deployment. In addition, the session information is encrypted using the public key for each voting machine. The session information may include such items as a ballot to be rendered and displayed to the voter, the identity of one or more datastores for storing the resulting data store, and a public key for the associated tabulation machine that will tabulate the results.

Once the voting machines are deployed (e.g. transported to a polling station, powered on, and provided with network connectivity, among other steps), the voting service downloads the session information to each machine. Since the session information was encrypted with each voting machine's public key prior to being downloaded, only the correct voting machine can decrypt it successfully with its private key. The voting machine does so during its setup procedure when being readied to host a voting session.

During the voting stage, users supply their votes to the voting machines by way of touch input, mouse clicks, stylus input, spoken commands, or any other suitable form of user input. In some cases, the voters may vote manually using punch cards, ink, or other analog measures. Their votes may then be converted into a digital record by scanning the analog record into an electronic voting machine.

The voting machines encrypt the voting data using the public key of the tabulation machine included in the session information each machine received. Each machine also uploads the encrypted voting data to the secure datastore(s) identified in the session information. When the results of a vote are to be determined, the tabulation machine selected for the task retrieves the voting data from the appropriate datastore(s). Because the voting data has been encrypted using the public key of the tabulation machine, only that tabulation machine (or machines, in the cases of multiple tabulation machines), may successfully decrypt the voting data.

In some scenarios, the tabulation machine decrypts and tabulates the results entirely in memory, to prevent the results from being tampered with in persistent or long-term storage. In any case, the results may be output to the appropriate personnel or other such destinations from where it may be published or otherwise distributed.

In some implementations, a paper record of each vote may be printed locally, proximate to a voting machine (e.g. at the same polling station). In some cases, the voting data may be sent to a secure printing facility proximate to or remote from the polling station. The voting machines may also be capable of sending copies of each vote to duplicate locations to ensure their integrity. Thus, the voting data may be available for auditing purposes to ensure that the tabulation machines performed properly.

FIG. **1** illustrates operational architecture **100** for implementing enhanced electronic voting in an embodiment. Operational architecture **100** includes a voting service **101**, administrative end-points represented by end-point **105**, reporting end-points represented by end-point **107**, and voting machines represented by voting machine **111**, voting machine **131**, and voting machine **141**. Voting service **101** includes various datastores represented by datastore **121** and datastore **122**. Voting service **101** also includes one or more tabulation machines, represented by tabulation machine **123** and **127**.

Voting service **101** provides a front-end presence to administrative end-points through which elections, polls, and other voting sessions may be configured. For example, election personnel may login to voting service **101** to enter or upload ballot questions, establish voting parameters, or otherwise setup their voting session. Voting service **101** also provides a portal to reporting end-points through which the results of a given vote may be obtained. Voting service **101** may be implemented as a stand-alone service or it may be integrated with other services of any type. Voting service **101** may be implemented in one or more data centers, represented by data center **103**, and on one or more computing systems, of which computing system **900** in FIG. **9** is representative. Voting service **101** may be implemented the cloud, such as in a private cloud environment, public cloud environment, or in a hybrid environment. In some embodiments, voting service **101** may be referred to as a cloud voting system or service.

Voters participate in the election, poll, or other such voting session via voting machines that communicate with voting service **101**. Voting machines **111**, **131**, and **141** are each representative of any computing device capable of communicating with voting service **101** and interfacing with voters. In some implementations, voting machines **111**, **131**, and **141** may be of the type specifically built for and dedicated to electronic voting. In other implementations, voting machines **111**, **131**, and **141** may be more general-purpose devices having electronic voting capabilities included therein, such as personal computers, smart phones, tablets, or any other suitable computing device. In either case, computing system **900** in FIG. **9** is representative of such devices.

Votes are stored in one or more datastores until the time at which they are retrieved and counted by one or more tabulation machines. Datastore **121** and datastore **122** may each be a database, a table, a partition thereof, or other such datastore capable of holding encrypted voting data. Datastore **121** and datastore **122** may be co-located relative to each other or located remotely from each other. In addition, datastore **121** and datastore **122** may have one or more backups. The datastores themselves may be backed-up in

some implementations, or the voting machines may send their encrypted voting data to multiple datastores in other implementations.

Voting service **101** employs a provisioning process **200** in various implementations, to provision one or more voting sessions. Provisioning process **200** may be implemented in program instructions in the context of any of the software applications, modules, components, or other such program elements that comprise voting service **101**. The program instructions direct the underlying physical or virtual computing system or systems that provide voting service **101** to operate as follows.

In operation, voting service **101** receives configuration information from one or more administrative end-points in relation to a given voting session (step **201**). The configuration information may be provided by personnel charged with administrating an election, poll, or other such voting session. The configuration information may be received via a secure communication channel established between an end-point and the service. In some implementations, an end-point may present a user interface through which the administrative personnel are able to upload, generate, or otherwise specify a configuration.

In some implementations, the configuration information may include the specific ballot questions to render on an electronic ballot. The configuration information may also include the identity of the specific voting machines that may be deployed in support of the voting session. In other examples, the specific voting machines are identified after the configuration information is received. In either case, the specific voting machines to be used for a given voting session are known by voting service **101**.

Next, voting service **101** pairs the voting machines with one or more tabulation machines that may be used to tabulate the results of the voting session (step **203**). This may include, for example, identifying one or more tabulation machines to use for a given voting session and recording the identity of the tabulation machine(s) in the configuration information received and maintained for the voting session.

At this point, voting service **101** has obtained configuration information for the voting session from administrative personnel and has supplemented the configuration information with the identity of the tabulation machine(s) to be used for tabulating the results of the voting session. The identity of the voting machines to be used may be provided by the administrative personnel when interfacing with voting service **101**, but may also be known to voting service **101** by some other mechanism. For instance, an entity associated with voting service **101** or a third-party may provide the voting machines and thus their identities.

In preparation for conducting a voting session, each voting machine communicates with voting service **101** to obtain session information for the session with which to configure and setup its operating environment. The requests identify the specific voting session that the voting machine is supporting and also provides the identity of the voting machine. Voting service **101** receives the requests (step **205**) and populates the session information on a per-machine/per-request basis (step **207**).

For example, in response to a given request, voting service **101** identifies the ballot to be deployed for the associated voting session. Voting service **101** also identifies the tabulation machine that was paired earlier with the voting machine making the request. Lastly, voting service **101** identifies one or more datastores that will be used to store the voting data produced by the voting machine.

A single datastore may be configured to store all of the voting data associated with a given ballot (e.g. all of the answers to all of the ballot questions on a ballot). In other implementations, multiple datastores may be configured to store duplicate versions of all of the voting data associated with a ballot. In still other implementations, the voting data for a ballot may be distributed across multiple datastores, such that the answers to ballot questions on a ballot are stored in different datastores relative to each other. In any case, identifying information for the datastore(s) is included in the session information that is prepared by voting service **101**.

In addition to datastore information, voting service **101** also stores the public key of a public-private key pair for tabulation machine to be associated with the requesting voting machine. The public key for the tabulation machine is also included in the session information that is prepared and held by voting service **101**.

Once the session information has been prepared, voting service **101** encrypts the voting information using the public key of a public-private key pair associated with the requesting voting machine (step **209**). That is, the ballot information, datastore information, and public key for the tabulation machine (but not its identity) are all encrypted using the voting machine's public key. It may be appreciated that the session information is encrypted differently for each request, as each voting machine has a different public key. Thus, the session information may only be decrypted successfully by the voting machine that possesses the corresponding private key. Having encrypted the session information, voting service **101** replies to each request with the encrypted session information (step **211**).

Referring now to FIG. **3**, voting machines **111**, **131**, and **141** each employ a deployment process **300** in various implementations, in the context of supporting one or more voting sessions. Deployment process **300** may be implemented in program instructions in the context of any of the hardware, firmware, software applications, modules, components, or other such program elements that comprise each electronic voting machine. The program instructions direct the electronic voting machines to operate as follows.

In operation, a given voting machine is deployed to be used with respect to one or more voting sessions, such as an election, a poll, or any other type of vote. The voting machine may be deployed to a specific physical location, such as a polling station. As part of the deployment process, the voting machine requests session information from voting service **101** (step **301**). The voting machine may request the session information automatically upon powering on. Alternatively, the voting machine may request the session information upon being prompted to do so by user input. For example, a voting application running on the voting machine may allow a technician to configure the voting machine for the session. Once appropriate network connectivity has been established, the application may be capable of communicating with voting service **101** over the Internet (or any other communication channel) to obtain the session information.

The request for session information may include information that identifies the voting machine to voting service **101**. The information may be, for example, a media access control (MAC) address associated with the voting machine. Alternatively, the voting machine may have been assigned a device identifier (ID) when manufactured, at the time of deployment to the polling station, or at any other time. The voting machine's identity may be known or readily accessible by the voting application running on the voting

machine. The identity of the voting machine allows voting service **101** generate and encrypt the session information appropriately.

The voting machine receives the session information from voting service **101** in its encrypted state (step **303**). As such, the voting machine must first decrypt the session information using its private key. The voting machine's private key may have been provisioned in hardware in the voting machine at the time of manufacture. Alternatively, the private key may be provided to the voting machine at the time of deployment. In still other embodiments, the private key may be communicated to the voting machine once it has established appropriate network connectivity. In any case, the private key may be provided by voting service **101**, by a third-party authority, or any other key repository.

Having decrypted the session information, the voting machine now be configured to conduct the voting session (step **305**). Conducting the voting session may include, for example, rendering a ballot and ballot questions in a user interface. User input may also be supplied via the user interface to express a given user's vote on each ballot question. The votes may be supplied through any of a variety of user input mechanisms, including touch input, mouse clicks, stylus input, spoken commands, or the like.

Next, the voting machine encrypts the votes using the public key provided in the session information (step **307**). In this manner, only the specific tabulation machine associated with the voting session and/or the voting machine is capable of successfully decrypting the voting data. The voting data may be stored and encrypted in a variety of ways with respect to the combinations of voters and ballot questions that are possible. For example, each individual voter's data (his or answers to the ballot questions on a ballot) may be stored and encrypted separately from that of other voters, e.g. in its own file. Alternatively, all of the data for all of the voters may be stored and encrypted together (e.g. in the same file or record). The encryption may be performed after the voting data has been written to a given file or prior to the voting data has been to the file (e.g. in-memory). A variety of storage and encryption mechanisms are possible and may be considered within the scope of the present disclosure.

Having encrypted the voting data with the public key of an associated tabulation machine, the voting machine proceeds to send the voting data to one or more datastores specified in the session information (step **309**). The datastore (s) may be identified by way of a table identifier, a web address (e.g. URI/URL), or any other information suitable for identifying a datastore. In some implementations, the session information identifies a global datastore and from there, the encrypted data may be routed to one or more specific datastores. Alternatively, the session information may identify the specific data stores such that the encrypted data may be routed directly to them. While the voting data itself is encrypted, the voting machine may also communicate with the datastore over a secure channel using any suitable technology, such as HTTPS.

In some cases, the specific datastore may be provided to the voting machine after the fact, once voting has begun, as opposed to including the identity of the datastore in the initial session information. For example, the voting machine may attempt to upload encrypted voting data to voting service **101**. In reply, voting service **101** may return identifying information for the specific datastore to which the voting machine should send the encrypted voting data.

In still other scenarios, the session information may identify voting service **101** itself as the datastore for a given voting machine. The voting machine may thus upload the encrypted voting data to a front-end element in voting service **101**. The front-end element may then route the data to one or more datastores selected for that particular voting session. In other words, the voting machine need not always connect to and communicate directly with the actual datastore that functions as the repository for its voting data. Rather, voting service **101** or some other service may provide routing functionality to allow the identity of the datastore(s) to remain transparent or hidden to the voting machine.

Tabulation machines **123** and **127** each employ a tabulation process **400** in various implementations, in the context of tabulating the results of one or more voting sessions. Tabulation process **400** may be implemented in program instructions in the context of any of the hardware, firmware, software applications, modules, components, or other such program elements that comprise each tabulation machine. The program instructions direct the electronic voting machines to operate as follows.

In operation, a given tabulation machine is designated to tabulate some or all of the results for a voting session, such as an election, a poll, or the like. Voting data for the voting session is generated by the various voting machines that were deployed and associated with the tabulation machine ahead of the voting session. Once polls have closed (or voting has otherwise stopped), the tabulation machine receives an instruction to tabulate the results of the vote (step **401**). The instruction may originate from another system or service within voting service **101** or from a third-party service. In some scenarios, the instruction is provided within the larger context of an authentication and authorization process that ensures that only authorized personnel are able to initiate the tabulation process.

In response to a valid request, the tabulation machine retrieves the encrypted voting data from the relevant datastore (step **403**). Tabulation machine may obtain the identity of the datastore from another system or service within voting service **101**. Alternatively, the relevant datastore may be identified in the tabulation request. For example, the tabulation request may identify a table name, a web address, or the like. In other examples, the tabulation machine may request the voting data using an identity of a voting session included in the tabulation instruction, in which case a routing service may connect the tabulation machine to the appropriate datastore associated with the identified session.

Once the tabulation machine has retrieved the voting data, the tabulation machines decrypts the data using its own private key (step **405**). If the voting data was encrypted with the tabulation machine's public key, then the voting data will be successfully decrypted with the machine's private key. Otherwise, the voting data will be rendered inoperable or invalid.

In some implementations, the decryption step may be performed in-memory in the tabulation machine so that the decrypted data never resides on-disk or other persistent storage. In addition, the results may be tabulated entirely in-memory such that the decrypted data used during the tabulation step never resides on disk (step **407**). Alternatively, some or all of the decrypted data could be stored on persistent storage and the decryption and tabulation steps could utilize persistent storage.

The results are eventually returned by the tabulation machine to the source of the tabulation instruction or to any other destination (step **409**). The results may be published for election personnel to consume, for example, or communicated to news organizations. In many cases, the results of

the vote may need to be reported "up," to be aggregated with the results of other jurisdictions.

FIG. **5** illustrates an operational scenario that may occur with respect to the operational architecture illustrated in FIG. **1**, as voting service **101**, voting machines **111**, **131**, and **141**, and tabulation machines **123**, and **127** employ provisioning process **200**, deployment process **300**, and tabulation process **400** respectively.

In operation, personnel associated with end-point **105** interface with voting service **101** to setup a voting session. The voting session may comprise, for example, a local election, a regional election, a supra-regional election, or the like. The personnel may upload ballots, ballot questions, or any other information that may be relevant to carrying out the voting session. In this example scenario, the actual voting machines that are to be deployed in support of the election are known to the personnel. Accordingly, the personnel provide the identity of the machines to voting service **101** when configuring the election.

Voting machines are then deployed to carry out the actual elections operations. Assuming a supervised environment for exemplary purposes, the voting machines are setup at a polling station by personnel associated with the election, by personnel associated with voting service **101**, or by third-party personnel (e.g. consultants).

As part of the setup procedure, the voting machines request session information from voting service **101**. The requests include the identities of the voting machines, so that voting service **101** can generate the appropriate session information. This includes retrieving the appropriate ballot for the voting machine, identifying the appropriate datastore, and identifying the appropriate tabulation machine.

Once known, voting service **101** may encrypt the session information individually for each voting machine. In this example, configuration information **106** indicates that voting machines **111** and **141** have been associated with tabulation machine **123**, while voting machine **131** has been associated with tabulation machine **127**. Accordingly, session information **113** is encrypted with the public key **114** associated with voting machine **111**, while the session information sent to voting machine **131** and voting machine **141** is encrypted with their respective public keys. Thus, only the voting machine for which the session information is intended can successfully decrypt the session information using its own private key. For example, voting machine **111** is able to decrypt the session information with its private key **115**.

The session information delivered to each voting machines includes ballot information, the identity of the datastore to which voting data should be sent, and the public key of the tabulation machine associated with the voting machine. Once the session information is decrypted, the voting machines can use the public key of their associated tabulation machine to encrypt voting data. The voting data may then be sent to the datastore identified in the session information.

For example, voting machine **111** receives user input from voters in the form of touch input, key strokes, mouse clicks, or the like, expressing a given voter's preference with respect to the various ballot questions that may be on a ballot **113**. Voting machine **111** encrypts the voting data using the public key **124** of its associated tabulation machine (tabulation machine **123**). Voting machine **111** then communicates the encrypted voting data to datastore **121**, as specified in its session information.

In contrast, voting machine **131** encrypts its voting data with public key **128**, which is the public key for tabulation machine **127**. In addition, voting machine **131** is directed to send some of its voting data to storage location **121** and some of its voting data to storage location **122**. However, while the voting data is sent to multiple datastores, it is encrypted only with the public key associated with tabulation machine **127**.

Voting machine **141** also sends its voting data to multiple datastores (datastore **121** and datastore **122**). However, its voting data is encrypted with the public key **124** associated with tabulation machine **123**. Accordingly, only tabulation machine **123** can decrypt its voting data successfully.

At tabulation time, tabulation machine **123** receives an instruction to tabulate the results of a given voting session. Tabulation machine **123** responsively retrieves the voting data associated with the voting session from the respective datastore(s) in which it is stored. For exemplary purposes, it is assumed that tabulation machine **123** is tasked with counting the votes cast by voters using voting machine **111** and voting machine **141** (and the other voting machines that they may represent).

A portion of the voting data for the voting session is stored in datastore **121**, while another portion of the voting data is stored in datastore **122**. Tabulation machine **123** therefore retrieves the data from both locations and decrypts the data using its private key **125**. Private key **125** may be provided to tabulation machine **123** at the time of manufacture, at the time of deployment, or at some other interval. For instance, private key **125** may be provided to tabulation machine **123** by another sub-system or service within voting service **101** during the setup process for the voting session. Alternatively, private key **125** may be provided to tabulation machine **123** by a third-party sub-system or service.

Tabulation machine **123** proceeds to decrypt the voting data and tabulates it in-memory. The results of the tabulation may be provided to end-point **107**, or any other end-point. The results may be published to a web page, a print-out, or any other suitable destination through which the results of the voting session may be known.

Tabulation machine **127** may also receive an instruction to tabulate the results of a given voting session. Tabulation machine **127** responsively retrieves the voting data associated with the voting session from the respective datastore(s) in which it is stored. For exemplary purposes, it is assumed that tabulation machine **127** is tasked with counting the votes cast by voters using voting machine **131** (and the other voting machines that it may represent).

A portion of the voting data for the voting session is stored in datastore **121**, while another portion of the voting data is stored in datastore **122**. Tabulation machine **123** therefore retrieves the data from both locations and decrypts the data using its private key **129**. Private key **129** may be provided to tabulation machine **127** at the time of manufacture, at the time of deployment, or at some other interval. For instance, private key **129** may be provided to tabulation machine **127** by another sub-system or service within voting service **101** during the setup process for the voting session. Alternatively, private key **129** may be provided to tabulation machine **127** by a third-party sub-system or service.

Tabulation machine **127** proceeds to decrypt the voting data and tabulates it in-memory. The results of the tabulation may be provided to end-point **107**, or any other end-point. The results may be published to a web page, a print-out, or any other suitable destination through which the results of the voting session may be known.

FIG. **6** illustrates an operational sequence **600** related to operational architecture **100** to better understand the timing involved in enhanced electronic voting. As depicted, administrative personnel operating end-point **105** supply user input

in order to setup and configure a new voting session. The election configuration is maintained by voting service **101** and may be distributed to the various voting machines engaged in the election.

Voting machines are then deployed to polling stations and setup in support of the election. The voting machines, of which voting machine **111** is representative, request session information from voting service **101**. The requests may be made over secure channels using suitable web encryption tools, such as HTTPS.

Voting service **101** receives the requests and encrypts the session information individually for each voting machine. The session information is encrypted using the public key associated with the voting machine, so that only that voting machine may successfully decrypt it. Voting service **101** sends the encrypted session information to the requesting voting machines, e.g. voting machine **111**.

The voting machines proceed to decrypt their session information using their own individual private keys. The session information includes ballot information with which to render an electronic ballot in a user interface. Voters at the polling station supply their votes via user input to the voting machines, generating voting data that is representative of their answers to the various ballot questions on the ballot.

The session information also includes a public key for a specific tabulation machine that was a priori selected to process the voting data generated by a given voting machine. The voting machines thus encrypt their voting data with the public key delivered in their session information. For example, voting machine **111** encrypts its voting data with the public key for tabulation machine **123**.

The encrypted voting data is then uploaded to the respective datastore identified in the session information sent to the voting machines. Voting machine **111** sends its data to datastore **121**, for example, although it may be directed to send its voting data to more than one datastore. The voting machines communicate the voting data over secure communication channels, such as HTTPS sessions established between the voting machines and the datastores or front-end systems or services that may exist between the voting machines and the datastores.

Once the election is over, one or more reporting end-points, represented by end-point **107**, may be used to trigger the tabulation process. Advanced authentication and authorization protocols may be employed to ensure the identity of the people driving the tabulation process. For instance, biometric security measures may be employed to ensure the identity of an election commissioner or other authorities. In some scenarios, multiple people must authorize a tabulation process before it can proceed.

Assuming all of the security requirements are satisfied, a tabulation instruction is issued from end-point **107** or some other system or service to tabulation machine **123**. The tabulation instruction may identify the election for which tabulation is sought, allowing it to request the correct voting data from datastore **121**. Alternatively, tabulation machine **123** may communicate with another system or service within voting service **101** to obtain the identify of the datastore that houses the relevant voting data.

In any case, tabulation machine **123** eventually connects to datastore **121** over a secure communication channel and retrieves the relevant voting data. The voting data, having been encrypted with the tabulation machine's public key, may only be successfully decrypted by that tabulation machine. Accordingly, tabulation machine **123** proceeds to decrypt the data and calculate the results of the one or more ballot questions that may have been the subject of the election. The tabulation may occur in-memory such that the voting data in its decrypted form is not persisted on-disk.

Tabulation machine **123** provides the results of the tabulation to end-point **107** or to any suitable destination. The results may be the complete results of a given election or they many need to be aggregated with other results tabulated by other machines. The aggregation may be automated in some cases or may proceed manually.

FIG. **7** illustrates another operational architecture and related scenario to depict other aspects of the enhanced electronic voting contemplated herein. Operational architecture **700** includes election ballots **701** and **711**. Election ballots **701** and **711** are representative of the ballots that may be rendered by voting machines (not shown). The ballots include ballot questions on which voters may vote. For example, election ballot **701** includes ballot question **703**, ballot question **705**, and ballot question **707**, while election ballot **711** includes ballot question **713**, ballot question **715**, and ballot question **717**.

In this illustration, the session information provided to each voting machine identifies a datastore on a per-question basis. The session information also identifies a public key on a per-question basis for encrypting the votes corresponding to each question. The answers to ballot question **703** are thus encrypted with public key **762**, which corresponds to tabulation machine **761**, and the answers are uploaded to table **723** in storage center **720**. In contrast, the answers to ballot question **705** and to ballot question **707** are sent to table **731** and table **733** respectively in storage center **730**, although the answers to both are also encrypted with public key **762**.

The answers to the ballot questions on ballot **711** are sent to different datastores and are encrypted with a different public key relative to those on ballot **701**. The answers to ballot question **713** are encrypted with public key **766**, which corresponds to tabulation machine **765**. The answers are uploaded to table **741** in storage center **740**. The answers to ballot question **715** are also encrypted with public key **766**, but are sent to table **751** in storage center **750**. Similarly, the answers to ballot question **717** are encrypted with public key **766**, but are uploaded to table **753**.

It may be appreciated that the remaining tables **721** and **743** may be used to store the answers to other ballot questions (not shown) on the same or other ballots.

At tabulation time, various personnel that may be operationally associated with the ballots or ballot questions interface with a front-end service provided by server **765** in order to obtain the results of a given vote. As an example, personnel A may login via an end-point **770**, while personnel B may login via endpoint **775**. The front-end service may provide the election personnel with a portal through which to commence vote counting and through which to obtain the results of a vote.

To tabulate a set of votes, the front-end service first identifies the ballot question or questions that may be relevant to the personnel. Knowing this, the front-end service determines which tabulation machine was associated with the subject ballot question or questions. The service then communicates with the tabulation machine to trigger the tabulation process. Identifying information may be provided to the tabulation machine to allow it to retrieve the correct voting data, such as the location of the voting data. Alternatively, identifying meta-data is provided to the tabulation machine with which it may look-up the proper datastore or communicate with another sub-system or service to identify the proper datastore.

In a brief example, personnel A may be interested in the results of ballot question **705**. Accordingly, tabulation

machine retrieves the encrypted voting data from table **731**, which is the table where the answers to ballot question **705** were stored. Tabulation machine **761** decrypts the voting data in-memory using its private key **763** and tabulates the election results. The election results may then be provided directly or indirectly to end-point **770** or any other appropriate destination. A similar process would ensue if personnel desired the results of ballot question **703** and ballot question **707**, except that the voting data would be retrieved from table **723** and table **733** respectively, rather than table **731**.

In another brief example, personnel B may be interested in the results of ballot question **715**. Accordingly, tabulation machine **765** retrieves the encrypted voting data from table **751**, which is the table where the answers to ballot question **715** were stored. Tabulation machine **765** decrypts the voting data in-memory using its private key **767** and tabulates the election results. The election results may then be provided directly or indirectly to end-point **775** or any other appropriate destination. A similar process would ensue if personnel desired the results of ballot question **713** and ballot question **717**, except that the voting data would be retrieved from table **741** and table **753** respectively, rather than table **741**.

FIG. **8** illustrates operational architecture **800** and a related scenario to depict additional aspects of the enhanced electronic voting contemplated herein. Operational architecture **800** includes election ballot **801** and **811**. Election ballots **801** and **811** are representative of the ballots that may be rendered by voting machines (not shown). The ballots include ballot questions on which voters may vote. For example, election ballot **801** includes ballot question **803**, ballot question **805**, and ballot question **807**, while election ballot **811** includes ballot question **813**, ballot question **815**, and ballot question **817**.

In this illustration, the session information provided to each voting machine identifies a datastore on a per-question basis. The session information also identifies public keys on a per-question basis for encrypting the votes corresponding to each question. The answers to ballot question **803** are thus encrypted with public key **862**, which corresponds to tabulation machine **861**, and the answers are uploaded to table **823** in storage center **820**. In contrast, the answers to ballot question **805** are encrypted with public key **865** associated with tabulation machine **864** and are uploaded to table **831** in storage center **830**. The answers to ballot question **807** are encrypted with public key **868** associated with tabulation machine **867** and are uploaded to table **841** in storage center **840**.

With respect to election ballot **811**, the answers to ballot question **813** are encrypted with public key **862** and are also sent to table **841**. In other words, ballot question **807** on election ballot **801** and ballot question **813** on election ballot **811** may pertain to the same election, such as a national political election or the like. The other ballot questions may pertain to local or regional elections, for example.

Continuing with election ballot **811**, the answers to ballot question **815** are encrypted with public key **865** and are uploaded to table **843**. The answers to ballot question **817** are encrypted with public key **868** and are stored in table **851**. It may be appreciated that the remaining tables **821**, **833**, and **853** may be used to store the answers to other ballot questions (not shown) on the same or other ballots.

At tabulation time, various personnel that may be operationally associated with the ballots or ballot questions interface with a front-end service on server **865** in order to obtain the results of a given vote. As an example, personnel A may login via end-point **870**, while personnel B may login via end-point **880**, personnel C may login via end-point **890**. The front-end service may provide the election personnel with a portal through which to commence vote counting and through which to obtain the results of a vote.

To tabulate a set of votes, the front-end service first identifies the ballot question or questions that may be relevant to the personnel. Knowing this, the front-end service determines which tabulation machine was associated with the subject ballot question or questions. The service then communicates with the tabulation machine to trigger the tabulation process. Identifying information may be provided to the tabulation machine to allow it to retrieve the correct voting data, such as the location of the voting data. Alternatively, identifying meta-data is provided to the tabulation machine with which it may look-up the proper datastore(s) or communicate with another sub-system or service to identify the proper datastore(s).

In a brief example, personnel A may be interested in the results of an election that was manifested through ballot question **803** on election ballot **801** and ballot question **813** on election ballot **811**. Accordingly, tabulation machine **861** retrieves the encrypted voting data from table **823** and table **841**, which are the tables where the answers to the relevant ballot questions were stored. Tabulation machine **861** decrypts the voting data in-memory using its private key **863** and tabulates the election results. The election results may then be provided directly or indirectly to end-point **870** or any other appropriate destination.

In another brief example, personnel B may be interested in the results of an election that was manifested through ballot question **805** on election ballot **801** and ballot question **815** on election ballot **811**. Accordingly, tabulation machine **864** retrieves the encrypted voting data from table **831** and table **815**, which are the tables where the answers to the relevant ballot questions were stored. Tabulation machine **864** decrypts the voting data in-memory using its private key **866** and tabulates the election results. The election results may then be provided directly or indirectly to end-point **880** or to any other appropriate destination.

In still another brief example, personnel C may be interested in the results of an election that was manifested through ballot question **807** on election ballot **801** and ballot question **817** on election ballot **811**. Accordingly, tabulation machine **867** retrieves the encrypted voting data from table **833** and table **851**, which are the tables where the answers to the relevant ballot questions were stored. Tabulation machine **867** decrypts the voting data in-memory using its private key **869** and tabulates the election results. The election results may then be provided directly or indirectly to end-point **890** or to any other appropriate destination.

FIG. **9** illustrates computing system **901**, which is representative of any system or collection of systems in which the various applications, services, scenarios, and processes disclosed herein may be implemented. Examples of computing system **901** include, but are not limited to, server computers, rack servers, web servers, cloud computing platforms, and data center equipment, as well as any other type of physical or virtual server machine, container, and any variation or combination thereof. Other examples may include smart phones, laptop computers, tablet computers, desktop computers, hybrid computers, gaming machines, virtual reality devices, smart televisions, smart watches and other wearable devices, as well as any variation or combination thereof.

Computing system **901** may be implemented as a single apparatus, system, or device or may be implemented in a distributed manner as multiple apparatuses, systems, or

devices. Computing system **901** includes, but is not limited to, processing system **902**, storage system **903**, software **905**, communication interface system **907**, and user interface system **909**. Processing system **902** is operatively coupled with storage system **903**, communication interface system **907**, and user interface system **909** (optional).

Processing system **902** loads and executes software **905** from storage system **903**. Software **905** includes process **906**, which is representative of the processes discussed with respect to the preceding FIGS. **1**-**8**, including provisioning process **200**, deployment process **300**, and tabulation process **300**. When executed by processing system **902** to enhance electronic voting, software **905** directs processing system **902** to operate as described herein for at least the various processes, operational scenarios, and sequences discussed in the foregoing implementations. Computing system **901** may optionally include additional devices, features, or functionality not discussed for purposes of brevity.

Referring still to FIG. **9**, processing system **902** may comprise a micro-processor and other circuitry that retrieves and executes software **905** from storage system **903**. Processing system **902** may be implemented within a single processing device, but may also be distributed across multiple processing devices or sub-systems that cooperate in executing program instructions. Examples of processing system **902** include general purpose central processing units, graphical processing unites, application specific processors, and logic devices, as well as any other type of processing device, combination, or variation.

Storage system **903** may comprise any computer readable storage media readable by processing system **902** and capable of storing software **905**. Storage system **903** may include volatile and nonvolatile, removable and non-removable media implemented in any method or technology for storage of information, such as computer readable instructions, data structures, program modules, or other data. Examples of storage media include random access memory, read only memory, magnetic disks, optical disks, flash memory, virtual memory and non-virtual memory, magnetic cassettes, magnetic tape, magnetic disk storage or other magnetic storage devices, or other suitable storage media, except for propagated signals. Storage system **903** may be implemented as a single storage device, but may also be implemented across multiple storage devices or sub-systems co-located or distributed relative to each other. Storage system **903** may comprise additional elements, such as a controller, capable of communicating with processing system **902** or possibly other systems.

Software **905** may be implemented in program instructions and among other functions may, when executed by processing system **902**, direct processing system **902** to operate as described with respect to the various operational scenarios, sequences, and processes illustrated herein. For example, software **905** may include program instructions for implementing provisioning process **200**, deployment process **300**, and tabulation process **300**.

In particular, the program instructions may include various components or modules that cooperate or otherwise interact to carry out the various processes and operational scenarios described herein. The various components or modules may be embodied in compiled or interpreted instructions, or in some other variation or combination of instructions. The various components or modules may be executed in a synchronous or asynchronous manner, serially or in parallel, in a single threaded environment or multi-threaded, or in accordance with any other suitable execution paradigm, variation, or combination thereof. Software **905** may include additional processes, programs, or components, such as operating system software, virtual machine software, or other application software, in addition to or that include process **906**. Software **905** may also comprise firmware or some other form of machine-readable processing instructions executable by processing system **902**.

In general, software **905** may, when loaded into processing system **902** and executed, transform a suitable apparatus, system, or device (of which computing system **901** is representative) overall from a general-purpose computing system into a special-purpose computing system to enhance electronic voting. Indeed, encoding software **905** on storage system **903** may transform the physical structure of storage system **903**. The specific transformation of the physical structure may depend on various factors in different implementations of this description. Examples of such factors may include, but are not limited to, the technology used to implement the storage media of storage system **903** and whether the computer-storage media are characterized as primary or secondary storage, as well as other factors.

For example, if the computer readable storage media are implemented as semiconductor-based memory, software **905** may transform the physical state of the semiconductor memory when the program instructions are encoded therein, such as by transforming the state of transistors, capacitors, or other discrete circuit elements constituting the semiconductor memory. A similar transformation may occur with respect to magnetic or optical media. Other transformations of physical media are possible without departing from the scope of the present description, with the foregoing examples provided only to facilitate the present discussion.

Communication interface system **907** may include communication connections and devices that allow for communication with other computing systems (not shown) over communication networks (not shown). Examples of connections and devices that together allow for inter-system communication may include network interface cards, antennas, power amplifiers, RF circuitry, transceivers, and other communication circuitry. The connections and devices may communicate over communication media to exchange communications with other computing systems or networks of systems, such as metal, glass, air, or any other suitable communication media. The aforementioned media, connections, and devices are well known and need not be discussed at length here.

User interface system **909** is optional and may include a keyboard, a mouse, a voice input device, a touch input device for receiving a touch gesture from a user, a motion input device for detecting non-touch gestures and other motions by a user, and other comparable input devices and associated processing elements capable of receiving user input from a user. Output devices such as a display, speakers, haptic devices, and other types of output devices may also be included in user interface system **909**. In some cases, the input and output devices may be combined in a single device, such as a display capable of displaying images and receiving touch gestures. The aforementioned user input and output devices are well known in the art and need not be discussed at length here.

User interface system **909** may also include associated user interface software executable by processing system **902** in support of the various user input and output devices discussed above. Separately or in conjunction with each other and other hardware and software elements, the user interface software and user interface devices may support a graphical user interface, a natural user interface, or any other type of user interface.

Communication between computing system **901** and other computing systems (not shown), may occur over a communication network or networks and in accordance with various communication protocols, combinations of protocols, or variations thereof. Examples include intranets, internets, the Internet, local area networks, wide area networks, wireless networks, wired networks, virtual networks, software defined networks, data center buses, computing backplanes, or any other type of network, combination of network, or variation thereof. The aforementioned communication networks and protocols are well known and need not be discussed at length here. However, some communication protocols that may be used include, but are not limited to, the Internet protocol (IP, IPv4, IPv6, etc.), the transfer control protocol (TCP), and the user datagram protocol (UDP), as well as any other suitable communication protocol, variation, or combination thereof.

In any of the aforementioned examples in which data, content, or any other type of information is exchanged, the exchange of information may occur in accordance with any of a variety of protocols, including FTP (file transfer protocol), HTTP (hypertext transfer protocol), HTTPS, REST (representational state transfer), WebSocket, DOM (Document Object Model), HTML (hypertext markup language), CSS (cascading style sheets), HTML5, XML (extensible markup language), JavaScript, JSON (JavaScript Object Notation), and AJAX (Asynchronous JavaScript and XML), as well as any other suitable protocol, variation, or combination thereof.

The functional block diagrams, operational scenarios and sequences, and flow diagrams provided in the Figures are representative of exemplary systems, environments, and methodologies for performing novel aspects of the disclosure. While, for purposes of simplicity of explanation, methods included herein may be in the form of a functional diagram, operational scenario or sequence, or flow diagram, and may be described as a series of acts, it is to be understood and appreciated that the methods are not limited by the order of acts, as some acts may, in accordance therewith, occur in a different order and/or concurrently with other acts from that shown and described herein. For example, those skilled in the art will understand and appreciate that a method could alternatively be represented as a series of interrelated states or events, such as in a state diagram. Moreover, not all acts illustrated in a methodology may be required for a novel implementation.

The descriptions and figures included herein depict specific implementations to teach those skilled in the art how to make and use the best option. For the purpose of teaching inventive principles, some conventional aspects have been simplified or omitted. Those skilled in the art will appreciate variations from these implementations that fall within the scope of the invention. Those skilled in the art will also appreciate that the features described above can be combined in various ways to form multiple implementations. As a result, the invention is not limited to the specific implementations described above, but only by the claims and their equivalents.

The invention claimed is:

1. A method of operating an electronic voting system, the method comprising:

in a voting machine, sending a request for session information to a session configuration service, wherein the request comprises a device identifier unique to the voting machine;

in the voting machine, receiving, from the session configuration service, the session information in an encrypted state for conducting a voting session, wherein the session information is encrypted using a public key for the voting machine and comprises:

ballot information with which to render an electronic ballot;

a first public key associated with a first section of the electronic ballot, wherein the first public key comprises one-half of an asymmetric key pair associated with a first tabulation machine;

a second public key associated with a second section of the electronic ballot, wherein the second public key comprises one-half of an asymmetric key pair associated with a second tabulation machine;

an identity of a first datastore for storing a first portion of votes cast in association with the electronic ballot; and

an identity of a second datastore for storing a second portion of the votes cast in association with the electronic ballot;

in the voting machine, decrypting the session information using a private key for the voting machine;

in the voting machine, presenting the first section of the electronic ballot in a user interface and receiving votes cast in association with the first section of the electronic ballot through the user interface;

in the voting machine, presenting the second section of the electronic ballot in the user interface and receiving votes cast in association with the second section of the electronic ballot through the user interface;

in the voting machine, encrypting the votes cast in association with the first section of the electronic ballot with the first public key to generate a first set of encrypted votes;

in the voting machine, encrypting the votes cast in association with the second section of the electronic ballot with the second public key to generate a second set of encrypted votes;

in the voting machine, sending the first portion of the votes to the first datastore, wherein the first portion of the votes comprises at least a portion of the first set of encrypted votes and a second portion of the second set of encrypted votes; and

in the voting machine, sending the second portion of the votes to the second datastore, wherein the second portion of the votes comprises at least a portion of the second set of encrypted votes and a second portion of the first set of encrypted votes;

wherein the first tabulation machine retrieves, for tabulation, the portion of the first set of encrypted votes from the first datastore and the second portion of the first set of encrypted votes from the second datastore; and

wherein the second tabulation machine retrieves, for tabulation, the portion of the second set of encrypted votes from the second datastore and the second portion of the second set of encrypted votes from the first datastore.

2. The method of claim **1** wherein the device identifier unique to the voting machine is a media access control address and wherein the session configuration service retrieves the session information already in the encrypted state using the device identifier unique to the voting machine.

3. The method of claim **1** wherein:

the first set of encrypted votes can only be decrypted by the first tabulation machine having stored thereon a first private key, wherein the first private key comprises

another one-half of the asymmetric key pair associated with the first tabulation machine; and

the second set of encrypted votes can only be decrypted by the second tabulation machine having stored thereon a second private key, wherein the second private key comprises another one-half of the asymmetric key pair associated with the second tabulation machine.

4. The method of claim **3**, further comprising:

decrypting the first set of encrypted votes using the first private key; and

tabulating the votes cast in association with the first section of the electronic ballot in the first tabulation machine.

5. The method of claim **4**, further comprising:

decrypting the second set of encrypted votes using the second private key; and

tabulating the votes cast in association with the second section of the electronic ballot in the second tabulation machine.

6. The method of claim **1** wherein each of the first datastore and the second datastore are accessible to the first tabulation machine and the second tabulation machine.

7. A computing apparatus comprising:

one or more computer readable storage media;

a processing system operatively coupled with the one or more computer readable storage media; and

program instructions for supporting electronic voting stored on the one or more computer readable storage media that, when executed by the processing system, direct the processing system to at least:

send a request for session information to a session configuration service, wherein the request comprises a device identifier unique to a voting machine sending the request;

receive the session information in an encrypted state for conducting a voting session, wherein the session information is encrypted using a public key for a voting resource and comprises:

ballot information with which to render an electronic ballot;

a first public key associated with a first section of the electronic ballot, wherein the first public key comprises one-half of an asymmetric key pair associated with a first tabulation machine;

a second public key associated with a second section of the electronic ballot, wherein the second public key comprises one-half of an asymmetric key pair associated with a second tabulation machine;

an identity of a first datastore for storing a first portion of votes cast in association with the electronic ballot; and

an identity of a second datastore for storing a second portion of the votes cast in association with the electronic ballot;

decrypt the session information using a private key for the voting resource;

present the first section of the electronic ballot in a user interface and receive votes cast in association with the first section of the electronic ballot through the user interface;

present the second section of the electronic ballot in the user interface and receive votes cast in association with the second section of the electronic ballot through the user interface;

encrypt the votes cast in association with the first section of the electronic ballot with the first public key to generate a first set of encrypted votes;

encrypt the votes cast in association with the second section of the electronic ballot with the second public key to generate a second set of encrypted votes; and

send the first portion of the votes to the first datastore, wherein the first portion of the votes comprises at least a portion of the first set of encrypted votes and a second portion of the second set of encrypted votes; and

sending the second portion of the votes to the second datastore, wherein the second portion of the votes comprises at least a portion of the second set of encrypted votes and a second portion of the first set of encrypted votes

wherein the first tabulation machine retrieves, for tabulation, the portion of the first set of encrypted votes from the first datastores and the second portion of the first set of encrypted votes from the second datastore; and

wherein the second tabulation machine retrieves, for tabulation, the portion of the second set of encrypted votes from the second datastore and the second portion of the second set of encrypted votes from the first datastore.

8. The computing apparatus of claim **7** wherein the device identifier unique to the voting machine comprises a media access control address and wherein the session configuration service retrieves the session information already in the encrypted state using the identity of the voting resource.

9. The computing apparatus of claim **7** wherein:

the first set of encrypted votes can only be decrypted by the first tabulation machine having stored thereon a first private key, wherein the first private key comprises another one-half of the asymmetric key pair associated with the first tabulation machine; and

the second set of encrypted votes can only be decrypted by the second tabulation machine having stored thereon a second private key, wherein the second private key comprises another one-half of the asymmetric key pair associated with the second tabulation machine.

10. The computing apparatus of claim **9**, further comprising:

decrypting the first set of encrypted votes using the first private key; and

tabulating the votes cast in association with the first section of the electronic ballot in the first tabulation machine.

11. The computing apparatus of claim **10**, further comprising:

decrypting the second set of encrypted votes using the second private key; and

tabulating the votes cast in association with the second section of the electronic ballot in the second tabulation machine.

12. The computing apparatus of claim **7** wherein each of the first datastore and the second datastore are accessible to the first tabulation machine and the second tabulation machine.

13. A method of conducting a voting session, the method comprising:

in a voting machine, sending a request for session information to a session configuration service, wherein the request comprises a device identifier unique to the voting machine sending the request;

in the voting machine, receiving the session information in an encrypted state for conducting the voting session, wherein the session information comprises:

a ballot having a plurality of ballot questions, wherein each ballot question is associated with a tabulation machine of a plurality of tabulation machines;

a first encryption key associated with at least one ballot question of the plurality of ballot questions, wherein the first encryption key comprises one-half of an asymmetric key pair associated with a first tabulation machine of the plurality of tabulation machines;

a second encryption key associated with at least one different ballot question of the plurality of ballot questions, wherein the second encryption key comprises one-half of an asymmetric key pair associated with a second tabulation machine of the plurality of tabulation machines;

an identity of a first datastore for storing at least a first portion of votes cast in association with the plurality of ballot questions; and

an identity of a second datastore for storing at least a second portion of the votes cast in association with the plurality of ballot questions;

in the voting machine, presenting the ballot in a user interface of a voting machine and receiving votes cast in association with the plurality of ballot questions through the user interface;

in the voting machine, encrypting a first portion of the votes cast in association with the at least one ballot question with the first encryption key to generate a first set of encrypted votes, wherein the first encryption key is associated with a first decryption key stored on the first tabulation machine of the plurality of tabulation machines;

in the voting machine, encrypting a second portion of the votes cast in association with the at least one different ballot question with the second encryption key to generate a second set of encrypted votes, wherein the second encryption key is associated with a second decryption key stored on the second tabulation machine of the plurality of tabulation machines;

in the voting machine, sending the first portion of the votes cast in association with the plurality of the ballot questions to the first datastore, wherein the first portion of the votes cast in association with the plurality of the ballot questions comprises at least a portion of the first set of encrypted votes and second portion of the second set of encrypted votes; and

in the voting machine, sending the second portion of the votes cast in association with the plurality of the ballot questions to the second datastore, wherein the second portion of the votes cast in associated with the plurality of the ballot questions comprises at least a portion of the second set of encrypted votes and second portion of the first set of encrypted votes;

wherein the first tabulation machine retrieves, for tabulation, the portion of the first set of encrypted votes from the first datastore and the second portion of the first set of encrypted votes from the second datastore; and

wherein the second tabulation machine retrieves, for tabulation, the portion of the second set of encrypted votes from the second datastore and the second portion of the second set of encrypted votes from the first datastore.

14. The method of claim **13** wherein the first encryption key is a public key of the asymmetric key pair associated with the first tabulation machine and the first decryption key is a private key of the asymmetric key pair associated with the first tabulation machine.

15. The method of claim **13** wherein:

the device identifier unique to the voting machine is a media access control address; and

the session configuration service retrieves the session information in an encrypted state using the device identifier unique to the voting machine.

16. The method of claim **13** wherein the first portion of the votes cast in association with the plurality of the ballot questions to the first datastore comprises at least one of the votes encrypted with the first encryption key.

17. The method of claim **13** further comprising decrypting the first portion of the votes using the first decryption key stored on the first tabulation machine.

* * * * *